OPW Engineered Systems
PART OF OPW FLUID TRANSFER GROUP
A DOVER COMPANY

- PIPE, TUBING, AND HOSE COUPLING SEALING SOLUTIONS
- PROCESS PIGGING
- PRODUCT RECOVERY TECHNOLOGIES

HILTAP FITTINGS LTD.

HT-3U SERIES

Medium pressure and temperate Quality Unions

TOTAL INTEGRITY ZERO HARM

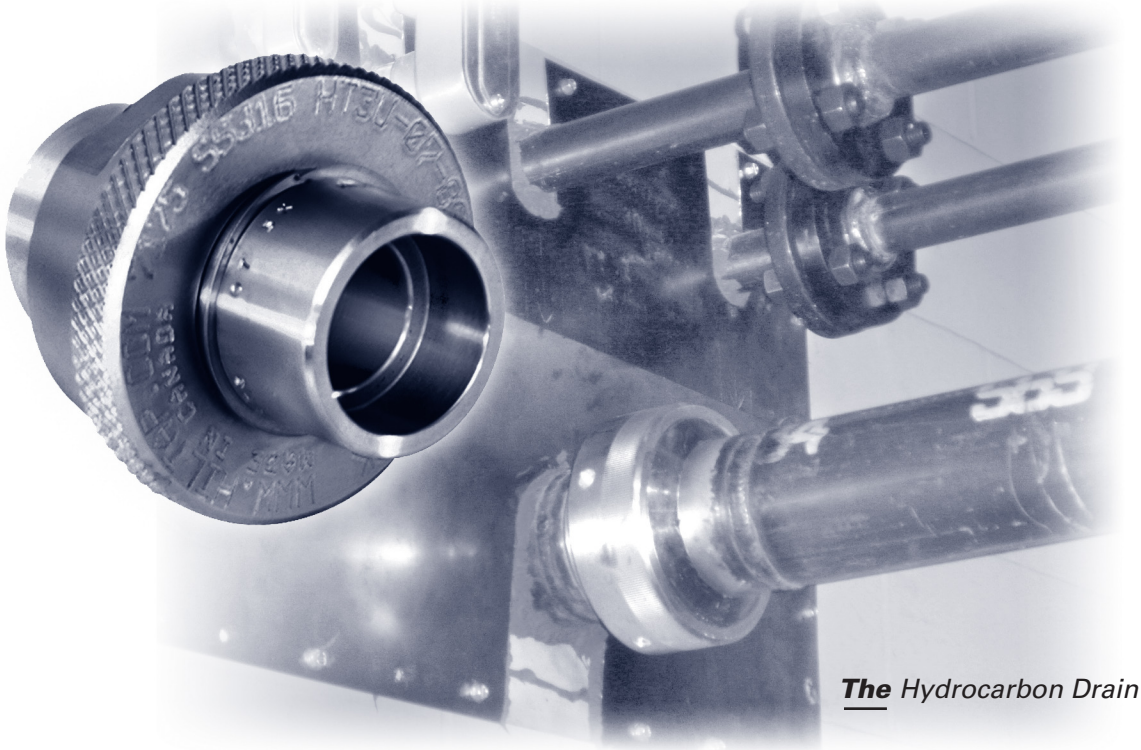

The *Hydrocarbon Drain Union*

Description

The HT-3U Series is an all purpose light weight quality union designed for leak proof operation as it cycles through a wide range of temperatures. The design offers a non-restrictive flow with no variation in pipe diameter. The reusable sealing components are made of different metals having their own unique hardness and thermal properties, so as to further enhance the seal as temperature and pressure changes are encountered. The safety ring ensures safe venting of residual pressure.

Features

- Contains fugitive emissions.
- Designed to replace conventional medium pressure unions/couplings.
- Easier installation and maintenance.
- Fully interchangeable with each other.
- Low profile/light weight.
- Reduced chance of galling.
- Repeatedly reusable metal to metal seal.
- Unique automatic safety feature vents residual pressure during uncoupling should residual pressure remain.
- Only light torque required when tightening to rated pressure.
- Compact and available in any combination of threaded, butt weld, socket weld or barbed.
- Designed and tested to ANSI B31.3.
- Quality assurance to ISO 9001-2000.
- Material traceability availability.

Please consult our website or catalogue for engineering specifications relating to your application.

HT-3U SERIES

Medium pressure and temperate Quality Unions

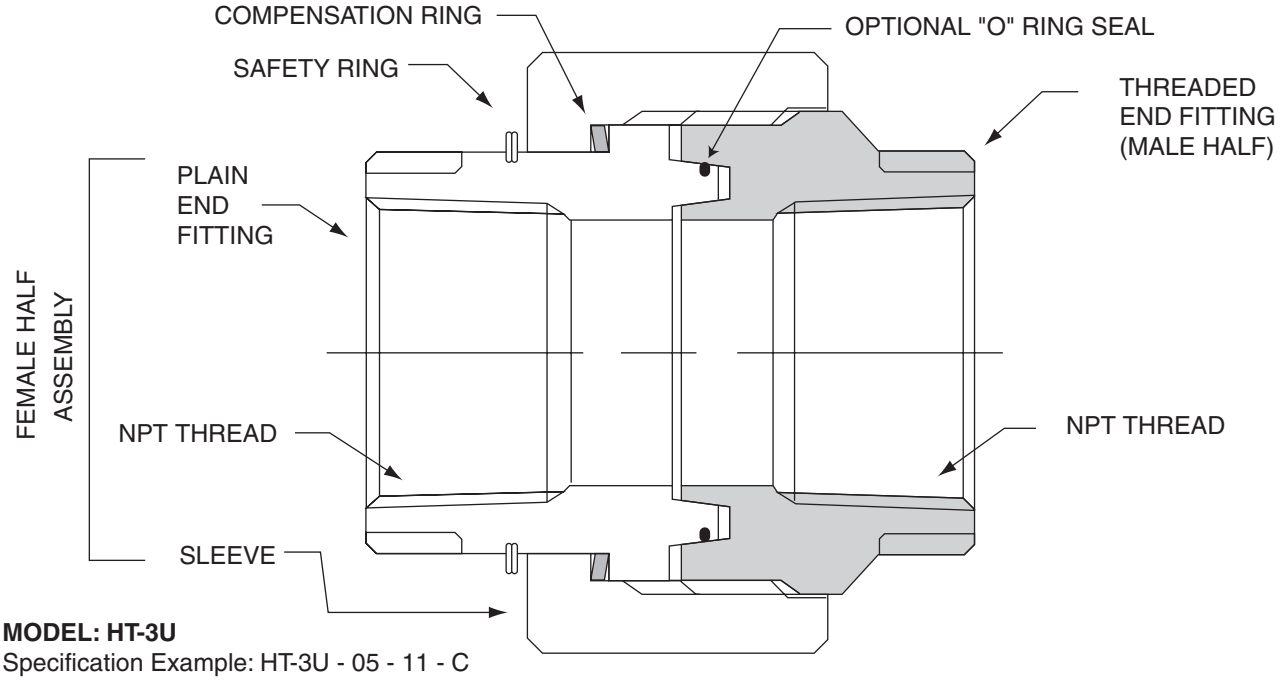

MODEL: HT-3U
Specification Example: HT-3U - 05 - 11 - C
(1/2" UNION Both Ends NPT Threads, Carbon Steel)

Pipe size (Inch)		(mm)	Working pressure PSI Socket Thread Butt Sch.40	Outside diameter (Inch) (mm)	Overall length (Inch) (mm)
1/4	(0.250)	6.3	Pressure ratings for 100˚ F 38˚C		
3/8	(0.375)	9.5	Please contact	Please contact	Please contact
1/2	(0.500)	12.7	Hiltap for	Hiltap for	Hiltap for
3/4	(0.750)	19.0	Specifications	Specifications	Specifications
1	(1.0)	25.4			

** For prolonged applications in temperatures above 800˚F (427˚ C) use of stainless steel coupling is recommended.*

Order Information *HT3U - 05 - 11 - C*

Size	*Plain end* / *Threaded end*	*Material*
1/4" 02- 0.250 inch (6.3 mm) **3/8" 03-** 0.375 inch (9.5 mm) **1/2" 05-** 0.500 inch (12.7 mm) **3/4" 07-** 0.750 inch (19.0 mm) **1.0" 07-** 1.0 inch (25.4 mm)	**1.** Internally threaded **2.** Externally threaded **3.** Butt weld **4.** Socket weld male **5.** Socket weld female **6.** Hose barbed* **Special order*	• Carbon steel A350/LF2 • Stainless steel 304/316/316L dual grade • Aluminum 6061 T6 • Other materials available (eg. Monel, Hastelloy, Inconel) *• Coatings (eg. Zinc, Cadmium, Teflon)

Note: For other materials, sizes and pressure ratings, consult Hiltap. Seal caps/plugs and dust caps are available

Safe, Environmentally friendly, Quality products.
Patented, Patents pending.
1-800-661-6150 Toll-free U.S. only
(403) 250-2986 Canada **(403) 291-3592** Fax
www.hiltap.com

Distributed by: